STOVAX

RIVA

WOODBURNING & MULTI-FUEL
CASSETTE FIRES

A WARM WELCOME...

RIVA

When you choose a Riva, you are not only choosing a high efficiency fire, you are also choosing a perfectly formed addition to your home that will create a stylish and elegant centrepiece.

The Riva range is the result of over 40 years of dedication to the development of exceptional woodburning and multi-fuel fires, providing outstanding flame visuals and superior heating efficiency.

Built to last and easy to operate, Riva fires are expertly crafted to provide you with years of warmth and enjoyment.

40 YEARS

40 years of British Design and Engineering

STOVAX

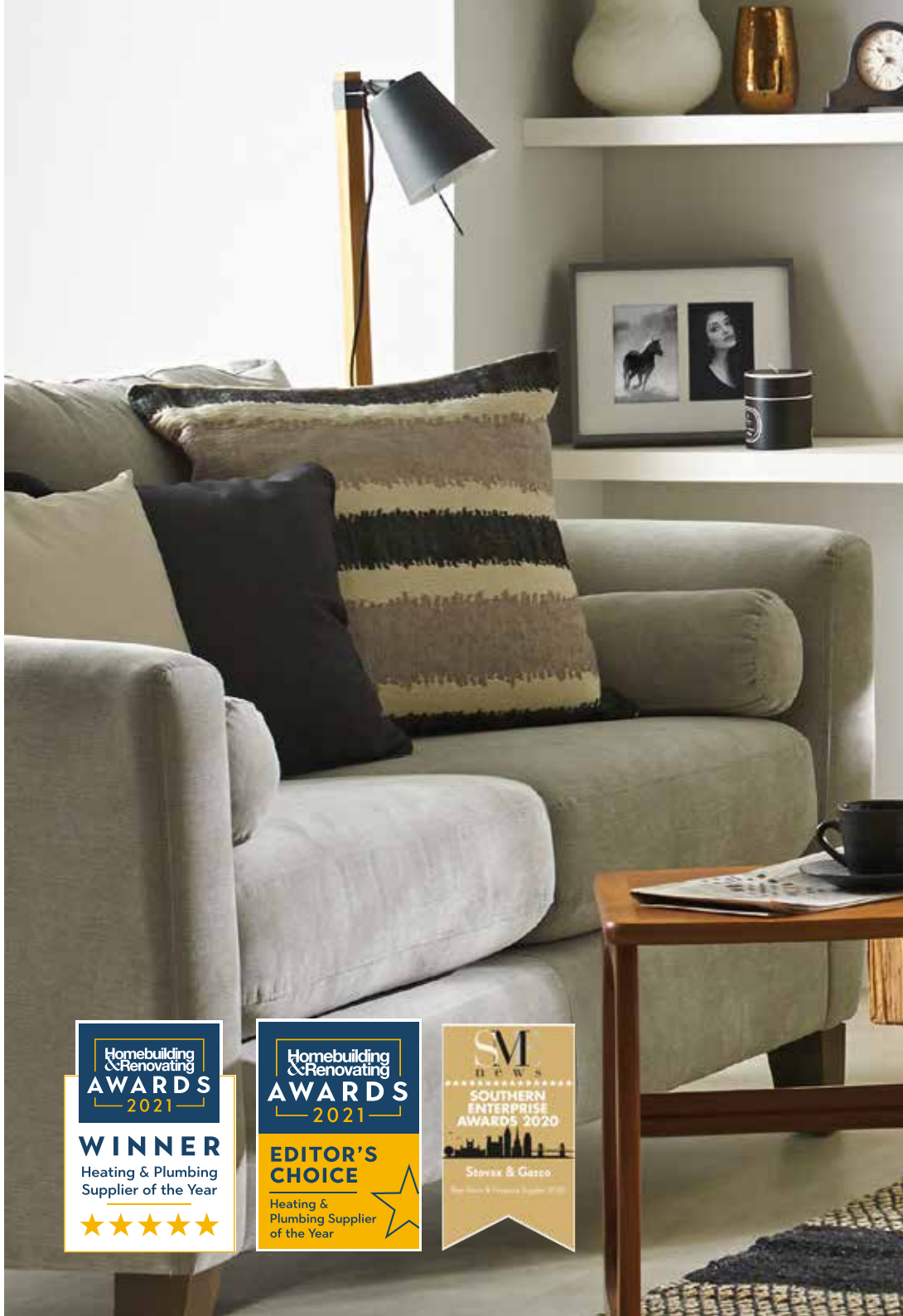

Riva 50 with handle removed and standard 3 sided frame

SIT BACK & RELAX...

Choosing a fire for your home should be a fun and exciting experience. We want you to be happy and relaxed from the moment you pick up this brochure, to the first time you light your kindling and for many years after! That's why we have carefully selected Expert Retailers to help you.

Expert Retailer Network

We take great care to ensure that our fires and stoves are designed, tested and manufactured to the highest possible quality and safety standards. We are just as determined to make certain that they are sold and installed correctly so that you enjoy years of pleasure from your purchase.

Accordingly, you will find our products are only available from experienced, independent retailers who will be happy to show you a selection of models locally in their showrooms, often fully operational. These independent retailers will discuss your individual requirements both technical (such as sizing the heat output to your room and advising on your chimney system) and visual, to ensure that you select the most appropriate product for your home. They will also be able to advise on, or assist with, the installation process as well as help provide any after-sales support and servicing your appliance may require in the future.

Whilst we encourage our retailers to promote fireplace products and their outlets via the internet, we do not believe suitable levels of customer care and satisfaction can be obtained from purchasing the product only online and we would strongly recommend that you consider this when undertaking your research and making a purchasing decision. Furthermore, please be aware that we do not offer technical support (beyond our statutory responsibilities) to products bought via nationwide online sales, where this support would normally be offered by one of our qualified, independent retailers.

You can find and support your nearest retailer by visiting: **stovax.com/retailers**

Extended Warranty

When you choose a Stovax fire or stove, quality and technology are assured. Accordingly, when you purchase your new fire from a Stovax Expert Retailer they will provide you with a Two Year Warranty. This can then be extended to a Five Year Warranty provided your Riva Fire is registered with Stovax. Fires and stoves purchased outside Stovax's Expert Retailer Network will carry a standard 12 month non-extendable warranty. Further details of this warranty are on page 18.

INNOVATION & INSPIRATION...

The space in which you live is an expression of your individual style. Riva cassettes have been designed to create a striking focal point and become the very heart of your home. Be inspired by their designs, impressed by their high levels of heating efficiency and admire their ease of control. Then simply relax in front of a real fire.

CE Marked

All fires and stoves in this brochure are CE Marked. This means they have been independently tested to exacting European standards for heating efficiency, emissions and safety.

Wood or Smokeless Fuel

Most Riva fires have options which will allow you to burn either logs or smokeless fuel. All Riva cassettes have a flat fuel bed because logs burn best on a level bed of ash. Smokeless fuels however, burn better on a raised grate that allows air to be drawn in from underneath. The design of the Riva range permits the combustion of either fuel with equal proficiency.

Woodburning

Unlike fossil fuels, wood releases approximately the same amount of carbon into the atmosphere as that absorbed during its growth, making it a virtually carbon neutral heat source.

All models in this brochure have been designed for the burning of wood with optimum efficiency. To ensure your fire provides optimum heating performance, only wood with a low moisture content should be burnt. Seasoned logs should be allowed to dry for at least two years or more to achieve a moisture content below 20%, which can be easily checked with a moisture meter. When purchasing seasoned or kiln dried wood, look for the Woodsure "Ready to Burn" certification which guarantees logs will have less than 20% moisture.

Good quality dry wood will not only provide a higher heat output than that of freshly felled timber, it will also avoid a build-up of tar in your flue and ensure low smoke emissions with clean and crisp flames.

Riva 66 with removable handle in situ and standard 4 sided frame.

Smoke Control Area Approved

Many town and city homes are located in DEFRA Smoke Control Areas as designated by the 1993 Clean Air Act. The Riva range has been approved for the burning of wood in these areas, meaning that even the most urban of homes can benefit from this natural fuel source.

RIVA | OUTSTANDING EFFICIENCY FIRES

Riva cassette fires incorporate Cleanburn technology with a unique 'Opti-Burn' setting. This means that they burn logs or smokeless fuels with outstanding efficiency, resulting in more heat delivery into the room and less going up the chimney. In addition to the radiant heat, a fourth airflow between the inner and outer skins of the Riva provides convected heat. This is emitted into the room naturally or, in the case of the 50, 55 and 66 cassettes, via an optional fan kit. These versatile cassette fires also offer the opportunity to heat other living spaces using an optional ducting system.

HIGH EFFICIENCY

Riva cassettes fires direct three types of air into the glass-fronted firebox, where they combine to provide superb flame control and exceptional views of the fire, which are further enhanced by Stovax's Airwash system that helps keep the glass clean.

Key Design Features

1. High density, thermal brick liner system.
2. Heated air jets from Cleanburn ports on all three sides burn hydrocarbons in smoke.
3. Unique stainless steel baffle (multi-fuel).
4. Single combustion control lever.
5. Unique "Opti-Burn" setting provides optimum efficiency and visual effect for woodburning.
6. Airtight door with removable stainless steel handle.
7. Convected and radiant heat.
8. Externally operated riddling grate.
9. Convected heat ducting system outlets (Riva 50, 55, 66 cassettes only).
10. Easy fit flue connection through cassette.
11. Removable stainless steel ashpan.
12. Optional cast iron, multi-fuel kit† (not illustrated)
13. Optional stainless steel tool holder (not illustrated)
14. Optional Smoke Control Kit enables the burning of logs in Smoke Control Areas
15. Optional fan-assisted convection system (Riva 50, 55 & 66 cassettes only - not illustrated)
16. Optional ash caddy (not illustrated)

†Required if smokeless fuel is to be used regularly

CLEANBURN TECHNOLOGY

AIRWASH CLEAR GLASS

DEFRA EXEMPT FOR SMOKE CONTROL AREAS

Riva 55 with standard 3 sided frame with removable handle in situ.

RIVA | CASSETTE SIZES

HIGH EFFICIENCY

The Riva Cassette fire range is available in a choice of sizes including portrait, landscape and one virtually square size. Choose from standard or wide Profil frames, both of which are available in three or four sided versions, depending on whether you want a traditional hearth mounted fire or a more contemporary 'hole in the wall' installation.

	RIVA 40 *(pages 8 - 9)*	RIVA 50 *(pages 10 - 11)*	RIVA 55 *(pages 12 - 13)*	RIVA 66 *(pages 14 - 15)*
Heat Output	Nominal: 4.9kW Range: 1.7 - 7kW	Nominal: 7.0kW Range: 2.2 - 10kW	Nominal: 8.0kW Range: 2.8 - 11kW	Nominal: 8.0kW Range: 2.8 - 11kW
Max. Efficiency	82%	83%	84%	80%
Energy Efficiency Class	A	A+	A+	A+
Wood & Multi-fuel	✓	✓	✓	✓
Max. Log Length	250mm (9¾")	350mm (13¾")	350mm (13¾")	450mm (17¾")

For detailed technical information, including firebox dimensions see pages 16 - 17.

Frame Options

3 Sided Standard Profil Frame

3 Sided Wide Profil Frame

4 Sided Standard Profil Frame

4 Sided Wide Profil Frame

Riva 40 with handle removed and 4 sided Wide Profil frame

Riva 40 with removable handle in situ, and wide 3 sided frame. Also shown: Brompton White Mantel available from Stovax

RIVA | 40

HIGH EFFICIENCY UP TO 82%

The smallest model in the Riva Cassette range has been specially designed to fit into a standard 22" (560mm) high x 16" (405mm) wide British fireplace opening with the chairbrick removed. So you can now update the look of your living room with minimal construction work, possibly even without the need to remove the existing hearth and mantel. Alternatively, the Riva 40 can be installed as a 'hole in the wall' fire.

In addition to providing excellent contemporary style, installing a Riva 40 significantly increases the level of heat in your room when compared to a conventional open fire. Combustion efficiency is up to four times greater; giving you more heat from your fuel.

Further image is shown on the page 7.

Key Technical Data

Nominal Heat Output	4.9kW (1.7 - 7kW)
Max. Efficiency	82%
Energy Efficiency Class	A
Max. Log Length	250mm (9¾")
Flue Connection (internal diameter)	128mm (5")

Key Options and Accessories

Fire Finishes	Metallic Black
Multi-fuel Kit*	
Stainless Steel Tool Holder	
Smoke Control Kit	

Required if smokeless fuel is to be used regularly - see page 17.

Frames

3 sided, standard Profil
4 sided, standard Profil
3 sided, wide Profil
4 sided, wide Profil

Frame Finishes

Metallic Black

For detailed technical information, including firebox dimensions see pages 16 - 17.

CLEANBURN TECHNOLOGY
AIRWASH CLEAR GLASS
DEFRA EXEMPT FOR SMOKE CONTROL AREAS

Riva 40 with handle removed and standard 4 sided frame

RIVA | 50

HIGH EFFICIENCY UP TO 83%

Riva 50 with handle removed and standard 3 sided frame

Giving a wonderful view of the radiant, dancing flames, the Riva 50 is an impressively efficient member of the Riva family. With clean, contemporary lines designed to fit into a 22" high and wide fireplace opening, the Riva 50 can be installed with relative ease on to a hearth with a 3 sided frame, or with a 4 sided frame to create a 'hole in the wall' look.

Further image is shown on the page 3.

Key Technical Data

Nominal Heat Output	7.0kW (2.2 - 10kW)
Max. Efficiency	83%
Energy Efficiency Class	A+
Max. Log Length	350mm (13¾")
Flue Connection (internal diameter)	128mm (5")

Key Options and Accessories

Fire Finishes	Metallic Black
Fan convection kit (240v)	
Warm air ducting kit (2 outlets)	
Multi-fuel Kit*	
Stainless Steel Tool Holder	
Smoke Control Kit	

**Required if smokeless fuel is to be used regularly - see page 17.*

Frames

3 sided, standard Profil
4 sided, standard Profil
3 sided, wide Profil
4 sided, wide Profil

Frame Finishes

Metallic Black

For detailed technical information, including firebox dimensions see pages 16 - 17.

CLEANBURN TECHNOLOGY

AIRWASH CLEAR GLASS

DEFRA EXEMPT FOR SMOKE CONTROL AREAS

Riva 50 with removable handle in situ and standard 4 sided frame

Riva 55 with handle removed and standard 4 sided frame.
The optional tool holder is also shown, see page 17 for details.

RIVA | 55

HIGH EFFICIENCY UP TO 84%

Providing greater heat output and a larger window to view the swirling flames, the Riva 55 can be installed into a fireplace opening that is 915mm h x 915mm w x 460mm d (36"h x 36"w x 18"d).

The Riva 55 can be upgraded to enhance your heating options. A fan-assisted convection kit reduces the time it takes to warm the room when the Riva is first lit.

Further image are shown on the page 6.

Key Technical Data

Nominal Heat Output	8.0kW (2.8 - 11kW)
Max. Efficiency	84%
Energy Efficiency Class	A+
Max. Log Length	350mm (13¾")
Flue Connection (internal diameter)	128mm (5")

Key Options and Accessories

Fire Finishes	Metallic Black
Fan convection kit (240v)	
Warm air ducting kit (2 outlets)	
Multi-fuel Kit*	
Stainless Steel Tool Holder	
Smoke Control Kit	

*Required if smokeless fuel is to be used regularly - see page 17.

Frames

3 sided, standard Profil
4 sided, standard Profil
3 sided, wide Profil
4 sided, wide Profil

Frame Finishes

Metallic Black

For detailed technical information, including firebox dimensions see pages 16 - 17.

CLEANBURN TECHNOLOGY

AIRWASH CLEAR GLASS

DEFRA EXEMPT FOR SMOKE CONTROL AREAS

Riva 55 with removable handle in situ and standard 3 sided frame

Riva 66 with wide 4 sided frame with removable handle in situ.
Shown with Contemporary Highline Log Store from Stovax.

RIVA | 66

HIGH EFFICIENCY UP TO 80%

Not only will this magnificent landscape cassette fire provide you with significant heating capacity, but it will also be a stunning focal point in your living room. This model is ideal for new-build homes, barn conversions or where major refurbishment is taking place and a large opening can be constructed for installation.

If you expect to burn smokeless fuel, a multi-fuel kit must be fitted due to the larger firebox. Not only does this decrease the amount of fuel you need to load but it also guides the fuel and cinders towards the grate for improved combustion. However, you may still burn wood with equal efficiency.

Further image are shown on the page 5.

Key Technical Data

Nominal Heat Output	8.0kW (2.8 - 11kW)
Max. Efficiency	80%
Energy Efficiency Class	A+
Max. Log Length	450mm (17¾")
Flue Connection (internal diameter)	153mm (6")

Key Options and Accessories

Fire Finishes	Metallic Black
Fan convection kit (240v)	
Warm air ducting kit (2 outlets)	
Multi-fuel Kit*	
Stainless Steel Tool Holder	
Smoke Control Kit	

Required if smokeless fuel is to be used regularly - see page 17.

Frames

3 sided, standard Profil
4 sided, standard Profil
3 sided, wide Profil
4 sided, wide Profil

Frame Finishes

Metallic Black

For detailed technical information, including firebox dimensions see pages 16 - 17.

CLEANBURN TECHNOLOGY

AIRWASH CLEAR GLASS

DEFRA EXEMPT FOR SMOKE CONTROL AREAS

Riva 66 with removable handle in situ and standard 4 sided frame.

TECHNICAL | INFORMATION

OPENING DIMENSIONS

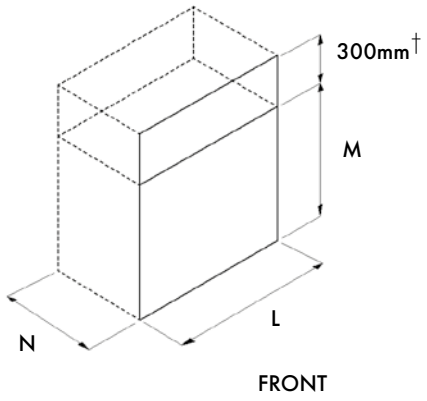

RIVA CASSETTE DIMENSIONS

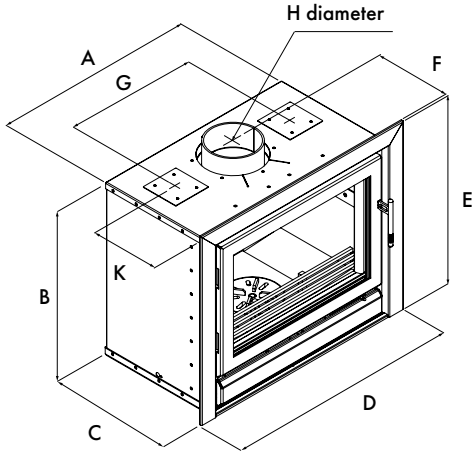

(all dimensions in mm)	Riva 40	Riva 50	Riva 55	Riva 66
A	400	540	540	650
B	550	550	660	550
C	350	350	350	395
D	492	632	632	742
E	599	599	709	599
F	234	234	234	248
G	N/A	360	360	420
H ø	128	128	128	153
K	N/A	N/A	234	248
L	410	550	550	660
M	560	560	670	560
N	355	360	355	405*
Flame Viewing Area (w x h)	269 x 325	409 x 325	409 x 435	503 x 325
Weight	**80kg**	**80kg**	**100kg**	**110kg**

†Extra height required when fitting Warm Air Ducting kit.

Please note the minimum distance to combustible materials for the Riva cassettes is 300mm.
For full details please refer to the installation manual.

RIVA CASSETTES FRAME DIMENSIONS (MM)

Product Code	Description	Height	Width
Riva 40			
RV40PRO3/B	3 Sided, Standard	599	492
RV40PRO3W/B	3 Sided, Wide	646	586
RV40PRO4/B	4 Sided, Standard	645	492
RV40PRO4W/B	4 Sided, Wide	739	586
Riva 50			
RV50PRO3/B	3 Sided, Standard	599	632
RV50PRO3W/B	3 Sided, Wide	646	726
RV50PRO4/B	4 Sided, Standard	645	632
RV50PRO4W/B	4 Sided, Wide	739	726
Riva 55			
RV55PRO3/B	3 Sided, Standard	709	632
RV55PRO3W/B	3 Sided, Wide	756	726
RV55PRO4/B	4 Sided, Standard	755	632
RV55PRO4W/B	4 Sided, Wide	849	726
Riva 66			
RV66PRO3/B	3 Sided, Standard	599	742
RV66PRO3W/B	3 Sided, Wide	645	836
RV66PRO4/B	4 Sided, Standard	645	742
RV66PRO4W/B	4 Sided, Wide	739	836

RIVA CASSETTES INFORMATION & PRODUCT CODES

Product Code	Description	Heat Output	Fuel Type	Efficiency	Energy Efficiency Class
RV40B ✓	Riva 40 Cassette	5.0kW	Multi-fuel	82%	A
RV50B ✓	Riva 50 Cassette	7.0kW	Multi-fuel	83%	A+
RV55B ✓	Riva 55 Cassette	8.0kW	Multi-fuel	84%	A+
RV66B ✓	Riva 66 Cassette	8.0kW	Multi-fuel	80%	A+

✓ *These models are approved for use in Smoke Control Areas when fitted with an optional Smoke Control Kit.*

A HETAS approved installer should undertake a site survey prior to purchase and must install any Riva Cassette Fire. *Your Stovax retailer will be able to advise on this and, in particular, the use of high temperature (1300°C) plaster/screed in the area around Riva cassettes. You may view/download complete installation instructions at our website -* ***stovax.com.*** *These diagrams cover some of the basic requirements. All fires should be installed by a competent person to the requirement of Building Regulations (Document J) and include the fitting of adequate ventilation to ensure safe use. Usually older buildings do not need any additional ventilation for appliances up to 5kW, but modern houses will need additional ventilation in all cases. The diagrams and dimensions on these pages cover some of the basic requirements and are for initial information purposes only.*

RIVA CASSETTE ACCESSORY PRODUCT CODES

RVAC001	Stainless Steel Tool Holder for Riva 40, 50, 55 & 66
RV55BFK	Fan-assisted convection circulation kit (240v) for Riva 50 & 55 (Metallic Black)
RV66BFK	Fan-assisted convection circulation kit (240v) for Riva 66 (Metallic Black)
8572	Warm air ducting kit for Riva 50, 55 & 66
Smoke Control Area Kits	
RV40SCKIT	Smoke Control Kit for Riva 40
RV55SCKIT	Smoke Control Kit for Riva 50 and 55
RV66SCKIT	Smoke Control Kit for Riva 66
Multi-fuel Kits*	
RVAC082*	Multi-fuel kit for Riva 40
RVAC101*	Multi-fuel kit for Riva 50 and 55
RVAC002*	Multi-fuel kit for Riva 66

**Required if smokeless fuel is to be used regularly*

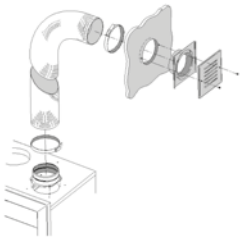

WARM AIR DUCTING KIT FOR RIVA CASSETTES

The kit, for the cassettes only, includes two 3 metre lengths of flexible ducting, allowing you to distribute up to half of the heat output to two other living spaces, extending the heating potential throughout your home.

MULTI-FUEL KIT FOR RIVA CASSETTES

If you expect to burn smokeless fuels with a Riva Cassette then you will need to fit the Multi-fuel Kit. By placing the cast iron guides into the base of the firebox, you will decrease the amount of fuel you need to load and allow the fuel and cinders to fall towards the grate for improved combustion. However, you may still burn logs with equal efficiency.

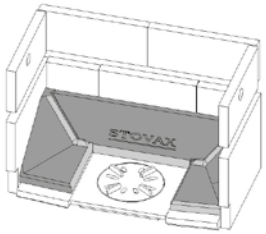

STAINLESS STEEL TOOL HOLDER FOR RIVA CASSETTES

A handy place to hold both your ash pan tool and door opening tool, the optional tool holder can be either hearth or wall mounted and, being crafted from high grade stainless steel, is the perfect complement to the contemporary styling of the Riva cassettes.

Riva 66 with removable handle in situ and standard 4 sided frame.

FURTHER | INFORMATION

Extended Warranty

When you choose a Stovax Riva fire, quality and technology are assured. Accordingly, your Stovax Expert Retailer will provide you with a two year warranty for your new appliance. This can then be extended to a five year warranty, provided it is registered with Stovax. Please note, these warranties exclude certain consumable parts. Fires purchased outside of Stovax's Expert Retailer Network will carry a standard one year non-extendable warranty.

Important Safety Details

Please note that all parts of these fires, particularly the glass panel in the door, become extremely hot during operation and can result in serious injury and burns if touched. It is therefore recommended that a fireguard complying with BS 8423:2002 is used in the presence of young children, the elderly or infirm. In addition, by law all installations also require a Carbon Monoxide monitor (such as product code 3045 available from Stovax).

"We absolutely love our fire"

"I knew as soon as I saw it that was the one for our living room"

WIN

the cost of your product back!*

For further home inspiration you can **view real life installations** at our Customer Showcase page and share your thoughts and photos of your new fire installation to enter our draw!

- We will publish your entry on our Customer Showcase
- You will be entered into a draw for the chance to win the cost of your product back
- **Gain a second entry** by registering your product online for your free extended warranty at **stovax.com/registration**

View real life installations and submit your review at

stovax.com/customershowcase

* Terms and conditions apply. See online for details

Professional XQ™ Chimney Systems and Enamelled Flue Pipe

Stovax also offers a comprehensive range of stove and fireplace chimney systems: the Stovax Professional XQ™ collection. Crafted from 304L grade stainless steel for a durable outer finish, the fully sealed components offer water tight protection for the insulation within.

With innovative decorative options, the ability to specify a colour for your system and with a host of technical advancements such as their Twist-Lock system, the Professional XQ™ range provides an attractive, versatile and reliable solution for your flue system. Furthermore, the Professional XQ™ range carries a 10 year conditional warranty offering complete peace of mind. For further information or to request a brochure, simply contact your local retailer or visit: stovax.com/chimneysystems.

ENAMELLED FLUE PIPE PRODUCT CODES

Description	128mm (5") Diameter	153mm (6") Diameter
Matt Black Flue Pipe		
1' (305mm) straight without door	4500	4600
1' (305mm) straight with door	4504	4604
2' (610mm) straight without door	4501	4601
2' (610mm) straight with door	4505	4605
3' (915mm) straight without door	4502	4602
3' (915mm) straight with door	4506	4606
1'3" - 2'1" (380 - 635mm) telescopic without door	4542	4642
3'4" - 4'6" (1015 - 1370mm) telescopic without door	4540	4640
90° tee piece with end cap (for rear exit)	4516	4616

Photography and Installation

Due to variations in studio lighting and printing inks, the finishes/colours of fires illustrated in this brochure may differ slightly from actual models. Before purchasing, please ask your retailer to show you finish/colour samples.

All of the flame pictures shown in this brochure are taken from real fires. Please note however that flame pictures will vary depending on the exact fuel used, flue conditions and surrounding geographical features. Given that building regulations are subject to constant change, some of the photography in this brochure may not comply with the requirements of the latest building regulations and you should always check your proposed installation arrangement with your HETAS trained installer before proceeding.

When designing your own installation, please also observe the minimum distance to combustible materials as stated in the installation instructions.

Stovax pursues a policy of continuous product improvement, therefore, whilst our products are correct at the time of the photography, we reserve the right to make alterations and amendments. Exact product details should be discussed with your retailer at the time of purchase.

The 'Nominal' heat output is to be used for calculating the ventilation provision as required by ADJ Building Regulations and for calculating its suitability for heating the size of room it will be fitted into. The heat output 'Range' is to be used as a guide only as the maximum and minimum performance will depend on local conditions such as flue pull, fuel quality and the way in which the product is used.

Register your fire and we'll plant a tree*...

*Mainland UK registrations only

We are working with our recommended British Woodsure "Ready to Burn" fuel supplier Certainly Wood to encourage sustainable woodland creation. For every stove or fire registered for our Extended Warranty in the UK*, the Stovax Heating Group and Certainly Wood will jointly fund the planting of a tree as part of our #GreenBritain campaign. Our goal is to plant 10,000 new trees each year in Britain.

Find out more at **stovax.com/GreenBritain**

OTHER FIRES & STOVES | FROM STOVAX

eco ECODESIGN READY

Vogue 700 Inset

Studio 2 Ecodesign Freestanding on Riva 120 Low Bench and Gloss Black Flue Pipe.

In addition to the exciting products shown throughout this brochure, Stovax offers various other models of woodburning and multi-fuel cassette and freestanding fires such as the Studio and Elise ranges, as well as the Vogue 700 Inset. Many of these fires are Ecodesign Ready whilst their progressive designs and state-of-the-art combustion systems make them not only some of today's cleanest burning fires, but also compliant with Ecodesign regulations.

Available in a wide variety of sizes, styling options, along with wider format landscape models, Stovax's versatile portfolio of fires are designed to offer choice for a host of interior requirements.

Further information on the Stovax portfolio can be found in separate, dedicated brochures for each range which can be requested from your local retailer or viewed online at **stovax.com.**

HAVE YOU CONSIDERED GAS AND ELECTRIC?

Gazco Loft with Steel Plinth

Reflex 75T-3 with EchoFlame Black Glass lining

Our gas and electric division, Gazco, design and build fires that provide stunning visuals at the touch of a button. Offering captivating, realistic flame pictures complemented by hand-painted fuel effects for breath-taking realism, these designer fires are available in either wall mounted and inset versions, in a variety of sizes to suit your home.

For more information on Gazco's range of gas and electric fires, visit **gazco.com** where brochures for each range can be downloaded or viewed online.

GAZCO

Gazco eStudio 135R with log-effect. Shown with optional Mood Lighting Kit.

Riva 50 with handle removed and standard 3 sided frame

STOVAX

Stovax Limited, Falcon Road, Sowton Industrial Estate, Exeter, Devon, England EX2 7LF

Trade Sales: Tel: 01392 474000 / NI: 01392 261990
Email: info@stovax.com / NI: northernireland@stovax.com

Export Sales: Tel: +44 1392 261990
Email: exportsales@stovax.com

stovax.com

40 YEARS

40 Years of British Design and Engineering

Find Your Local Expert Retailer

You can find your nearest retailer by visiting:
stovax.com/retailers

Your Stovax stockist:

RIVA

Stovax gratefully acknowledges the assistance of the following companies with photographic settings:
www.furniturevillage.co.uk; www.romo.com; www.debenhams.com; www.theorangetree.co.uk; www.justshutters.co.uk; www.homebase.co.uk; www.lauraashley.com; www.nestinteriors.com; www.graceandgloryhome.co.uk; www.stbridgetnurseries.co.uk; www.johnlewis.com; www.wayfair.com; www.veryvintagehire.co.uk; www.carpetright.co.uk; www.beachbros.co.uk; www.birlea.com; www.originalstyle.com; www.amtico.com; www.chunkymonkeyfurniture.co.uk; www.wallsandfloors.co.uk; www.desenio.co.uk; www.ikea.com; www.loaf.com

© All material copyright Stovax Limited 2021 E & O E Paper sourced from sustainable forests and printed using vegetable based inks

A member of the Stovax Group

Brochure ref: RIVA0721